Product Brief

10 GX 10M FPGA Module

Product Summary

The proFPGA 10 GX 10M FPGA module is the logic core for the scalable and modular multi-FPGA proFPGA solution, which fulfills highest needs in the area of FPGA based Prototyping. It addresses customers who need a scalable and most flexible high performance ASIC Prototyping solution for early software development and real-time system verification. The innovative system concept and technologies offer highest flexibility and reusability for several projects, which guarantees the best return on invest.

The proFPGA 10 GX 10M FPGA module, which only works in combination with a proFPGA uno, duo or quad motherboard, offers with its latest Intel® Stratix® 10 FPGA technology a maximum capacity of up to 60 M ASIC gates alone in one FPGA. It is designed to achieve highest performance in combination with its high speed connectors. The module offers with its 16 extension sites up to 2076 user I/Os for daughter boards (e.g. memory or interface boards), interconnect cables or customer specific application boards.

In addition to the regular I/Os the module also provides 48 high speed serial transceivers running up to 17.4 Gbps for high speed interfaces like PCIe Gen4. All of the 16 extension sites offer individually and stepless adjustable voltage regions from 1.2V up to 1.8V.

profpga 10 GX 10M FPGA Module Specification

FPGA Type	- Intel Stratix 10 GX 10M FPGA (speedgrade 2)
Capacity	- Up to 60 M ASIC gates
FPGA memory	- M20K: 253 Mbit / MLAB: 55 Mbit
DSP blocks	- 3456
Signaling rate	- Standard I/Os: up to 1 Gbps single ended - Transceiver Tiles: up to 17.4 Gbps
Extension sites	- 16 extension sites with high performance connectors
I/O resources	- Overall 2076 signals - 7 x 141 I/Os to top side connectors - 2 x 51 I/Os to top side connectors - 7 x 141 I/Os to bottom side connectors - Single-ended or differential
High speed I/O transceivers	- Overall 48 high speed transceivers on top side - 4 x 12 transcievers to top side connectors
Voltage regions	- 16 individually adjustable voltage regions per FPGA Module - Stepless from 1.2 up 1.8V - Automated voltage adjustment for daughter boards
Configuration	- Via Ethernet, USB on PCIe
Order Code	- PROF-FM-1SG10M-R1 (speedgrade 2)

profpga 10 GX 10M FPGA Module I/O and Clock Architecture

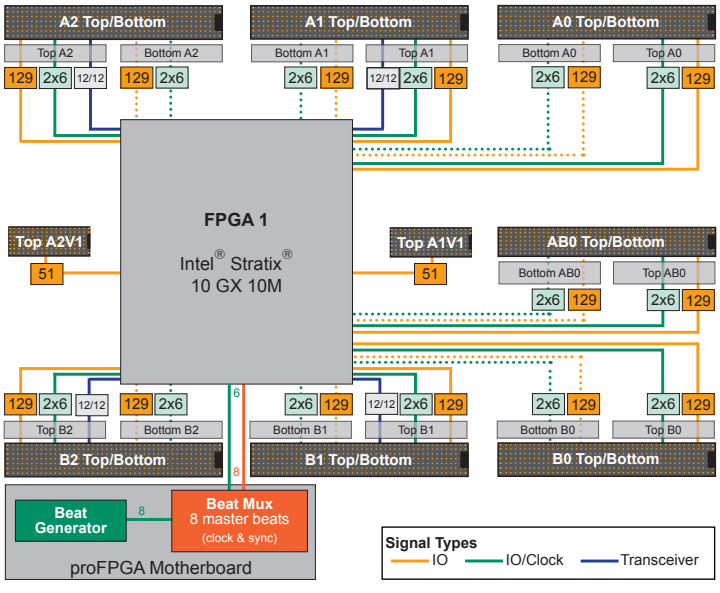

Copyright © 2019 PRO DESIGN Electronic GmbH. All rights reserved.
The proFPGA logo is a registered trademarks of PRO DESIGN Electronic GmbH. All other names mentioned herein are trademarks or registered trademarks of their respective companies.

PRO DESIGN Electronic GmbH
Albert-Mayer-Str. 14 - 16
83052 Bruckmuehl, Germany

Phone:+49 (0) 8062-808-0
FAX: +49 (0) 8062-808-404
profpga@prodesign-europe.com